300 DS SKYLIGHT - MANUFACTURERS INSTALLATION DETAIL PACKAGE - PAGE 1 OF 5

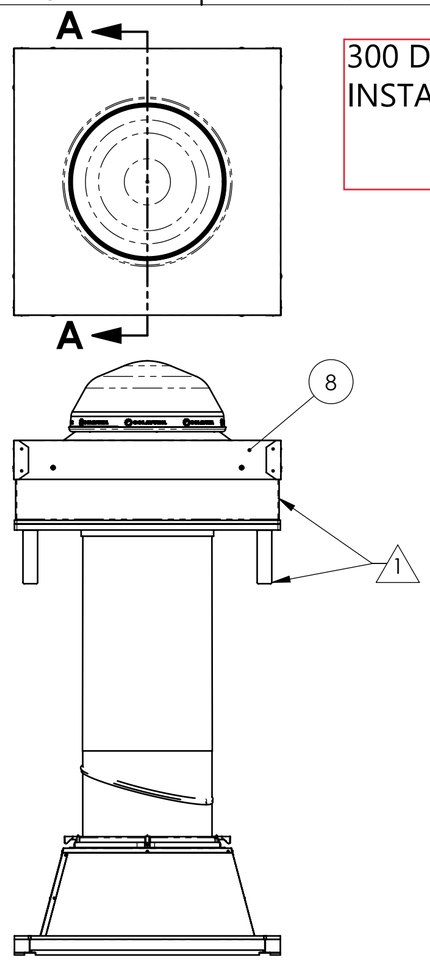

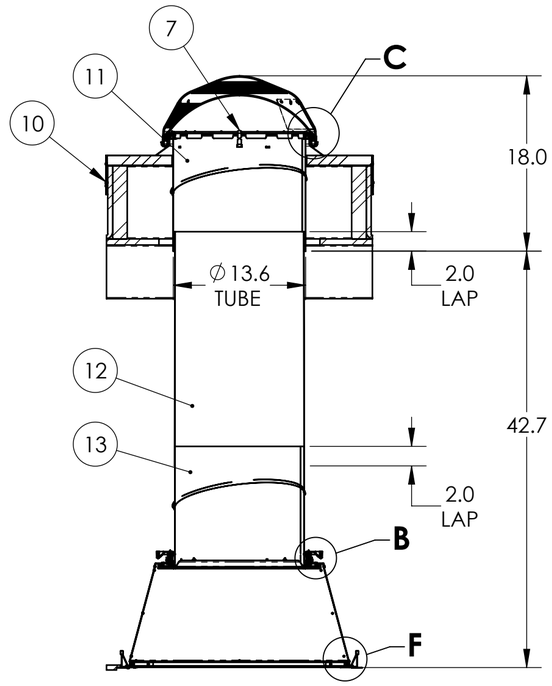

SECTION A-A

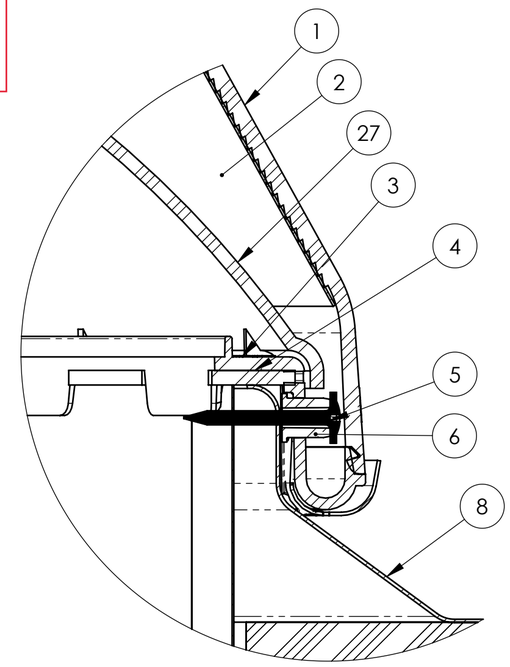

DETAIL C
SCALE 1 : 1

NOTES:

1. STRUCTURAL ELEMENTS (PLYWOOD, RAFTERS, DRYWALL ETC.) BY OTHERS & SHOWN FOR REFERENCE ONLY
2. ALL TUBE JOINTS & SEAMS TAPED WITH 2" FOIL TAPE (NOT SHOWN)
3. SEE PAGE 3 FOR ALTERNATE DIFFUSER CONFIGURATIONS
4. ITEM #22; RECTANGULAR FOAM OR SEALANT BEAD

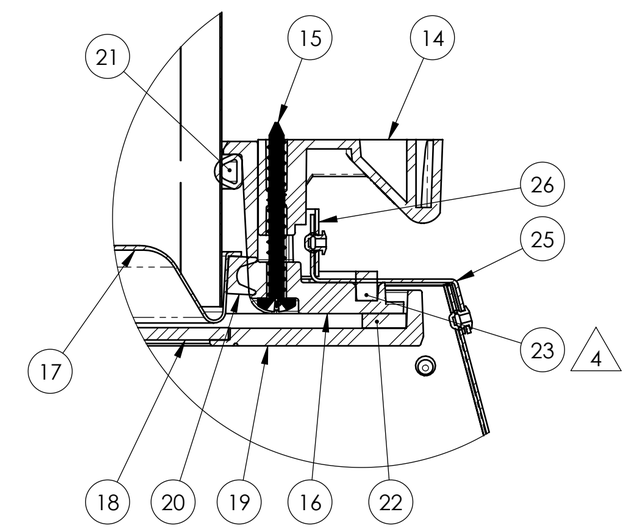

DETAIL B
SCALE 1 : 1

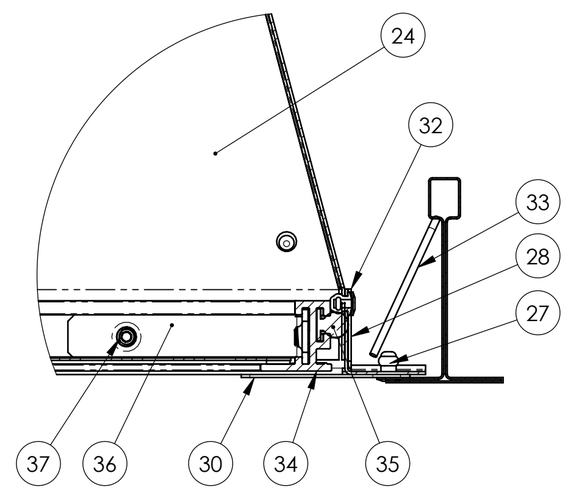

DETAIL F
SCALE 1 : 1

ITEM NO.	QTY.	PART NO.	DESCRIPTION	MATERIAL
1	1	410820	DOME 290 DS	PMMA
2	1	410830	LIGHTTRACKER RELECTOR 290 DS	ALUMINUM LAMINATE
3	1	410660	DOME RING 290 DS	PMMA
4	1	600610	FOAM SEAL RECTANGULAR 1/8" X 9/16"	FOAM (VARIOUS)
5	4	700240	SCREW #8 X 1" SMS	STEEL
6	4	410730	DOME RING SPACER	POLYAMIDE
7	3	410750	TOP TUBE CLIP	PMMA
8	1	230630	CURB FLASHING	STEEL
9	1	700280/700300	SEALANT (NOT SHOWN)	URETHANE
10	8	700480	SCREW #10 X 2" SMS	STEEL
11	1	302240	TOP TUBE 290 DS	ALUMINUM LAMINATE
12	1	301800/301830	EXT. TUBE 16"/24" 290 DS	ALUMINUM LAMINATE
13	1	302120	BOTTOM TUBE 290 DS	ALUMINUM LAMINATE
14	4	410220	CLAMP	POLYAMIDE
15	4	700450	SCREW #8 x 1.5" SMS	STEEL
16	1	410415	CEILING RING 290 DS	PMMA
17	1	421345	290 DS NATURAL EFFECT LENS	PET
18	1	410530, 420080	290 DS DIFFUSER PANEL	PMMA, PC
19	1	410715	DRESS RING 290 DS (OPTIONAL)	PMMA
20	1	600290	290 DS EFFECT LENS SEAL	EPDM FOAM
21	1	600445	D-SEAL HOLLOW	EPDM FOAM
22	1	420610	DRESS RING SEAL 290 DS (OPTIONAL)	PE FOAM
23	1	600620	FOAM SEAL RECTANGULAR 3/16" X 1/4"	CLOSED CELL FOAM
	1	-	ALTERNATE (PROVIDED BY USER)	ACRYLIC SEALANT (VARIOUS)
24	4	410775	TRANSITION PANEL DIMPLED 300 DS	ALUMINUM LAMINATE
25	1	402340	TRANSITION BOX CAP 300 DS	STEEL
26	1	402350	TRANSITION CAP BELT 300 DS	STEEL
27	10	701180	RIVET 1/8 X 1/4 BLIND, MULTI WHITE	ALUMINUM
28	4	402180	TRANSITION TRIM SECTION	STEEL
29	2	402250	TRANSITION TRIM CORNER BRACE (NOT SHOWN)	STEEL
30	2	402325	TRANSITION TRIM LEVER	STEEL
31	17.33 LF	620150	TAPE FOIL, ROLL 50M (NOT SHOWN)	ALUMINUM
32	32	700635	RIVET 1/8 x 1/4 BLIND, MULTI	ALUMINUM
33	4	520090	CLIP	STEEL
34	4	410475	EXTRUSION ALUMINUM	ALUMINUM
35	7.33 FT	600600	FOAM SEAL T-SLOT	URETHANE FOAM
36	4	701130	CORNER KEY	STEEL
37	8	701155	SET SCREW 8-32 X 1/8" CUP	STEEL

UNLESS OTHERWISE SPECIFIED:

TOLERANCES
ANGULAR: ±0.5°

INCH	MILLIMETER
.X ± .1	[.X] ± 2.5
.XX ± .01	[.XX] ± .25
.XXX ± .005	[.XXX] ± .12

MATERIAL
--
--

FINISH
--

DO NOT SCALE DRAWING

PROPRIETARY AND CONFIDENTIAL

THE INFORMATION CONTAINED IN THIS DRAWING IS THE SOLE PROPERTY OF SOLATUBE. ANY REPRODUCTION IN PART OR AS A WHOLE WITHOUT THE WRITTEN PERMISSION OF SOLATUBE IS PROHIBITED.

DRAWN BY: STEVENS — DATE: 10/11/17
CHECKED BY: -- — DATE: --
APPROVED BY: -- — DATE: --

SOLATUBE
2210 OAK RIDGE WAY
VISTA, CALIFORNIA 92081-8341
PH (760) 597-4400

TITLE:
300 DS (14") SOLATUBE ASSY METAL RTS

SIZE | DWG. NO. **300-CF-HC-STD** | REV **1**

SCALE: 1:12 | SHEET 1 OF 1

SOLATUBE 300 DS (14 IN / 355 MM) SELF-FLASHING SUSPENDED CEILING

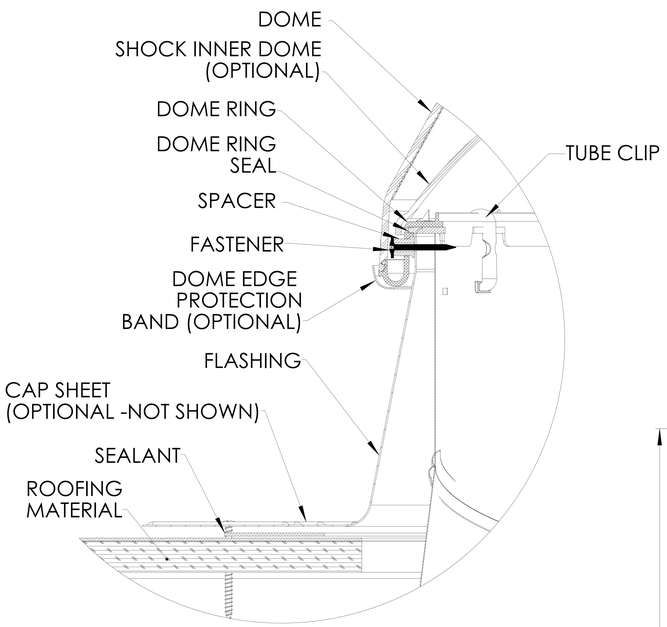

DETAIL B
SCALE 3 : 1

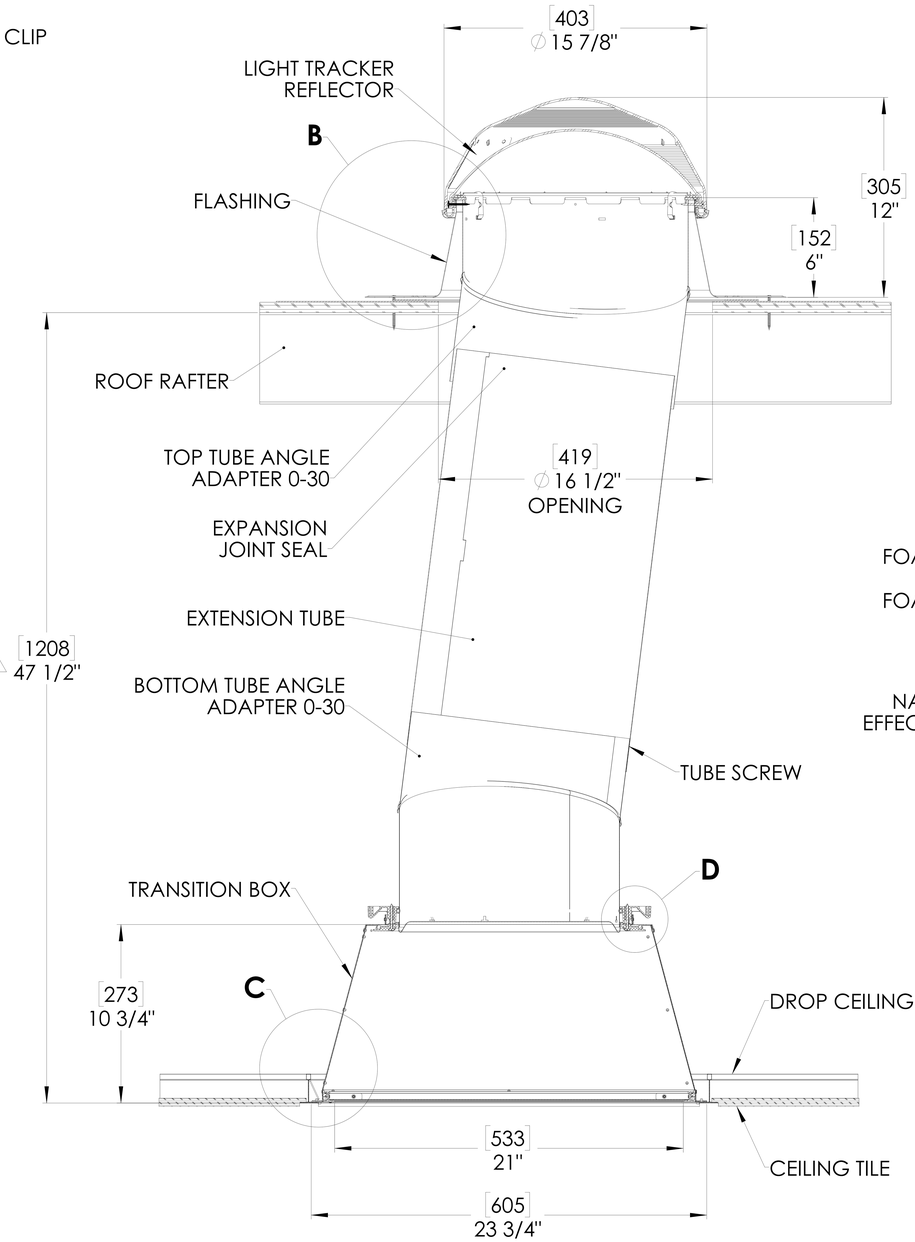

FULL SECTION
SCALE 1:1

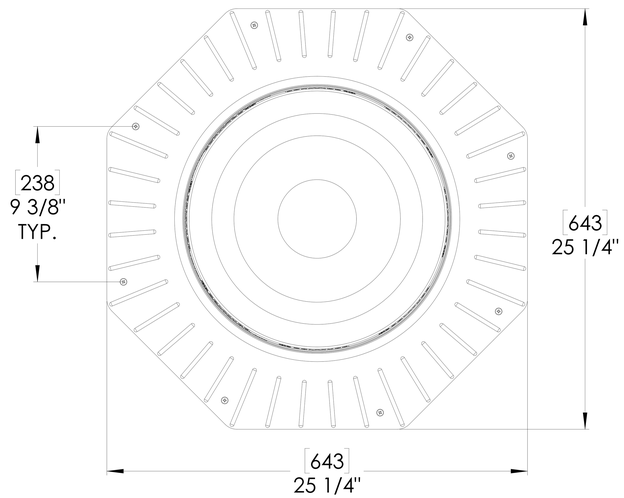

TOP VIEW

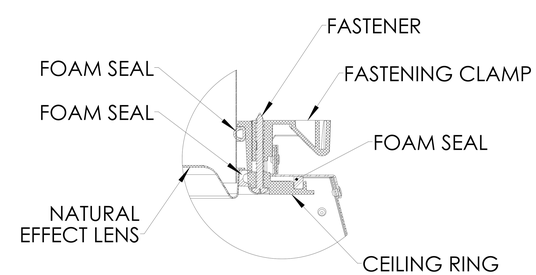

DETAIL D
SCALE 3 : 1

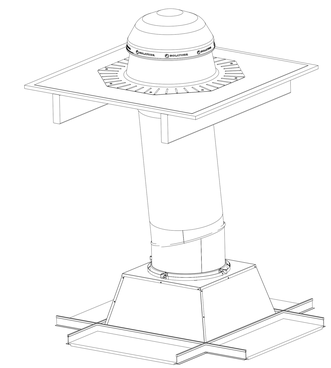

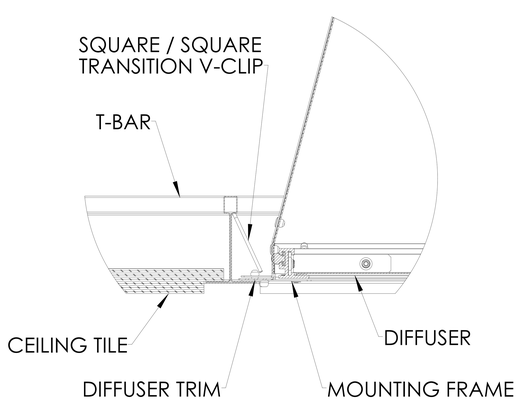

DETAIL C
SCALE 3 : 1

NOTES:
1. STRUCTURAL ELEMENTS (PLYWOOD, RAFTERS, DRYWALL ETC. BY OTHERS & SHOWN FOR REFERENCE ONLY.
2. ALL TUBE JOINTS & SEAMS TAPED WITH 2" FOIL TAPE (NOT SHOWN).
3. DIMENSIONS IN BRACKETS ARE METRIC UNLESS OTHERWISE SPECIFIED.
4. 6" MIN CLEARANCE SHOULD BE MAINTAINED FROM ALL SOLATUBE COMPONENTS AND OTHER PLENUM COMPONENTS.

5. 30" MIN HEIGHT NEEDED FOR TRANSITION BOX

UNLESS OTHERWISE SPECIFIED: DIMENSION TOLERANCE FRACTIONS ± 1/4" INCH: .X ± .1, .XX ± .06 MILLIMETER: [.X] ± 2.5, [.XX] ± 1.5	SOLATUBE INTERNATIONAL, INC. COPYRIGHT 2017 WWW.SOLATUBE.COM	SOLATUBE® 2210 OAK RIDGE WAY VISTA, CALIFORNIA 92081-8341 PH (760) 597-4400
MATERIAL -- --	DRAWN BY: STEVENS DATE: 3/17/17	TITLE: 300 DS SELF FLASHING SUSPENDED CEILING
FINISH --	CHECKED BY: -- DATE: --	SIZE: D DWG. NO.: SM300DS-C-DA-F6-TM REV: 1
DO NOT SCALE DRAWING	APPROVED BY: -- DATE: --	SCALE: 1:1 SHEET 1 OF 1

SOLATUBE 300 DS (14 IN / 355 MM) CURB CAP SUSPENDED CEILING

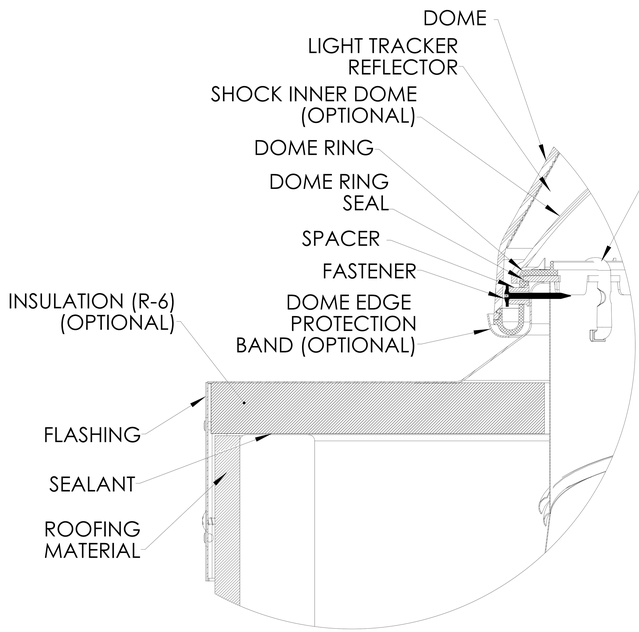

DETAIL B
SCALE 3 : 1

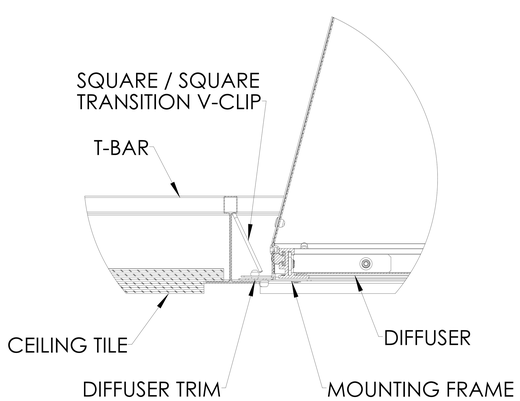

DETAIL C
SCALE 3 : 1

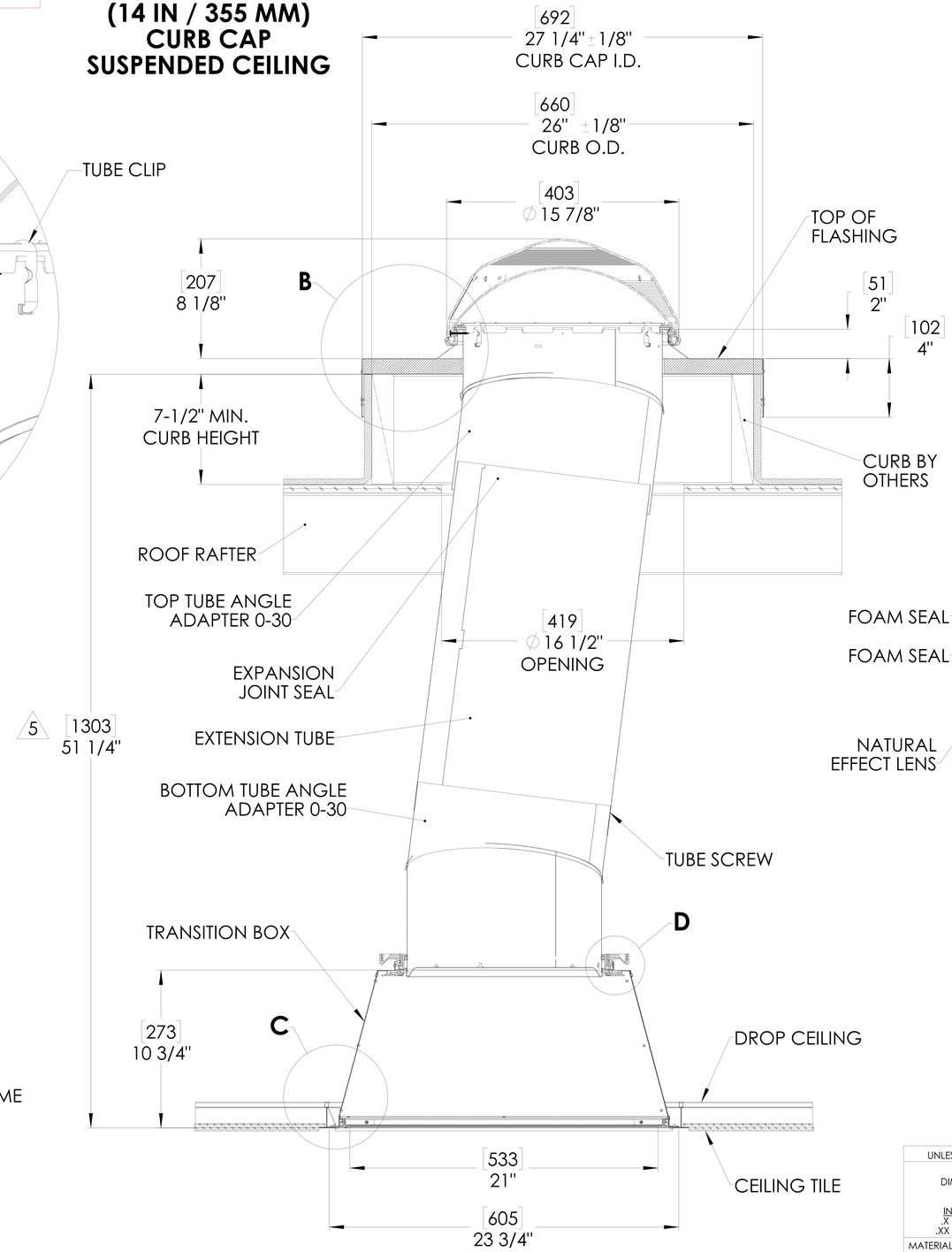

FULL SECTION
SCALE 1:1

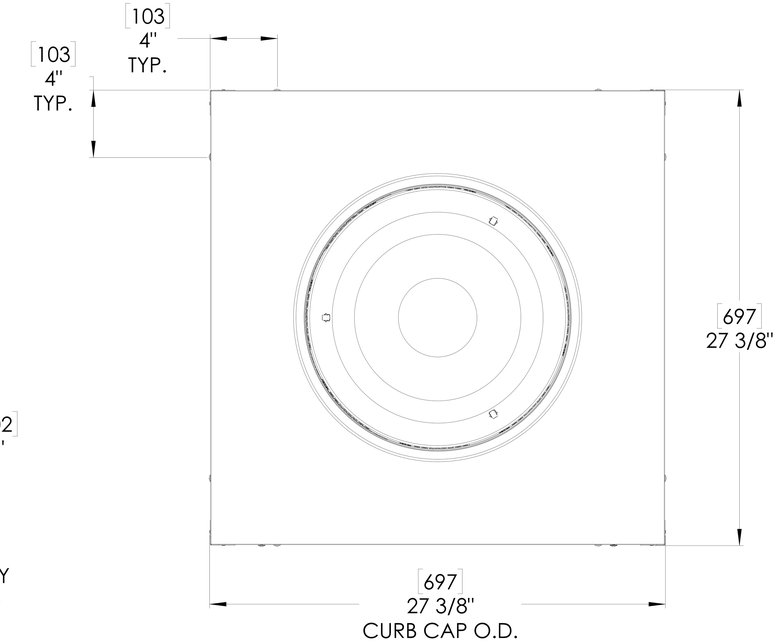

TOP VIEW

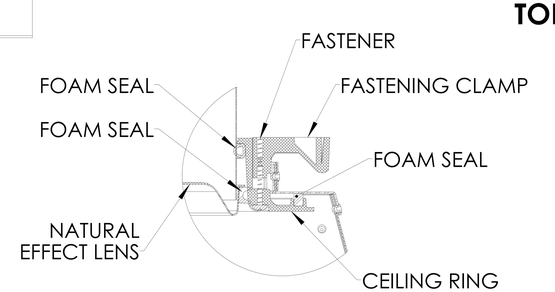

DETAIL D
SCALE 3 : 1

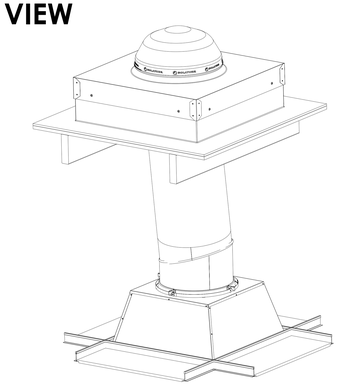

NOTES:
1. STRUCTURAL ELEMENTS (PLYWOOD, RAFTERS, DRYWALL ETC. BY OTHERS & SHOWN FOR REFERENCE ONLY.
2. ALL TUBE JOINTS & SEAMS TAPED WITH 2" FOIL TAPE (NOT SHOWN).
3. DIMENSIONS IN BRACKETS ARE METRIC UNLESS OTHERWISE SPECIFIED.
4. 6" MIN CLEARANCE SHOULD BE MAINTAINED FROM ALL SOLATUBE COMPONENTS AND OTHER PLENUM COMPONENTS.

5 . 30" MIN HEIGHT NEEDED FOR TRANSITION BOX

UNLESS OTHERWISE SPECIFIED: DIMENSION TOLERANCE FRACTIONS ± 1/4" INCH .X ± .1 .XX ± .06 MILLIMETER [.X] ± 2.5 [.XX] ± 1.5	SOLATUBE INTERNATIONAL, INC. COPYRIGHT 2017 WWW.SOLATUBE.COM	SOLATUBE 2210 OAK RIDGE WAY VISTA, CALIFORNIA 92081-8341 PH (760) 597-4400
MATERIAL -- --	DRAWN BY STEVENS — DATE 3/17/17	TITLE: 300 DS CURB CAP SUSPENDED CEILING
FINISH --	CHECKED BY -- — DATE --	SIZE D — DWG. NO. SM300DS-C-DA-FC-TM — REV 1
DO NOT SCALE DRAWING	APPROVED BY -- -- — DATE --	SCALE: 1:1 — SHEET 1 OF 1

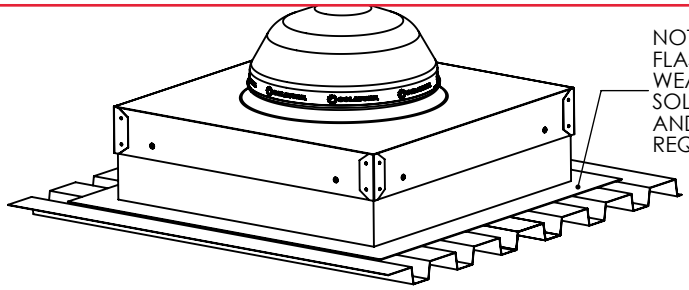

NOTE:
FLASHING PROVIDED BY SOLATUBE.
WEATHERPROOFING DETERMINED BY SOLATUBE GENERAL CONTRACTOR AND/OR PROFESSIONAL ROOFER AS REQUIRED.

METAL ROOF
TYPE II OR III CONSTRUCTION
WITH STANDARD DIFFUSER ASSEMBLY

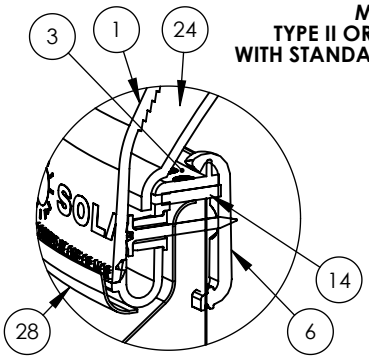

DOME ASSEMBLY
DETAIL A

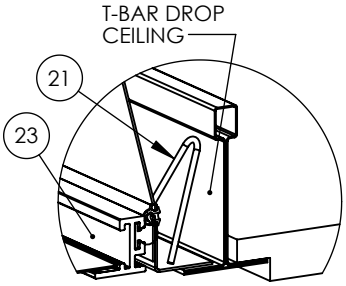

METAL TRANSITION
AT DROP CEILING
DETAIL B

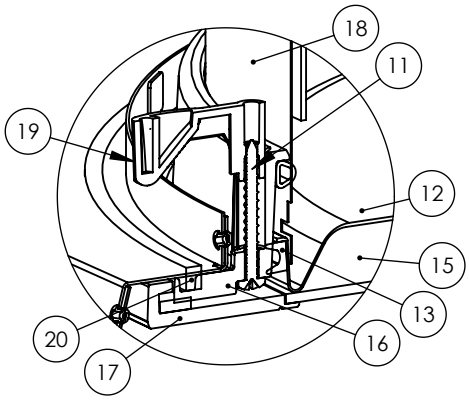

CEILING RING ASSEMBLY
DETAIL B

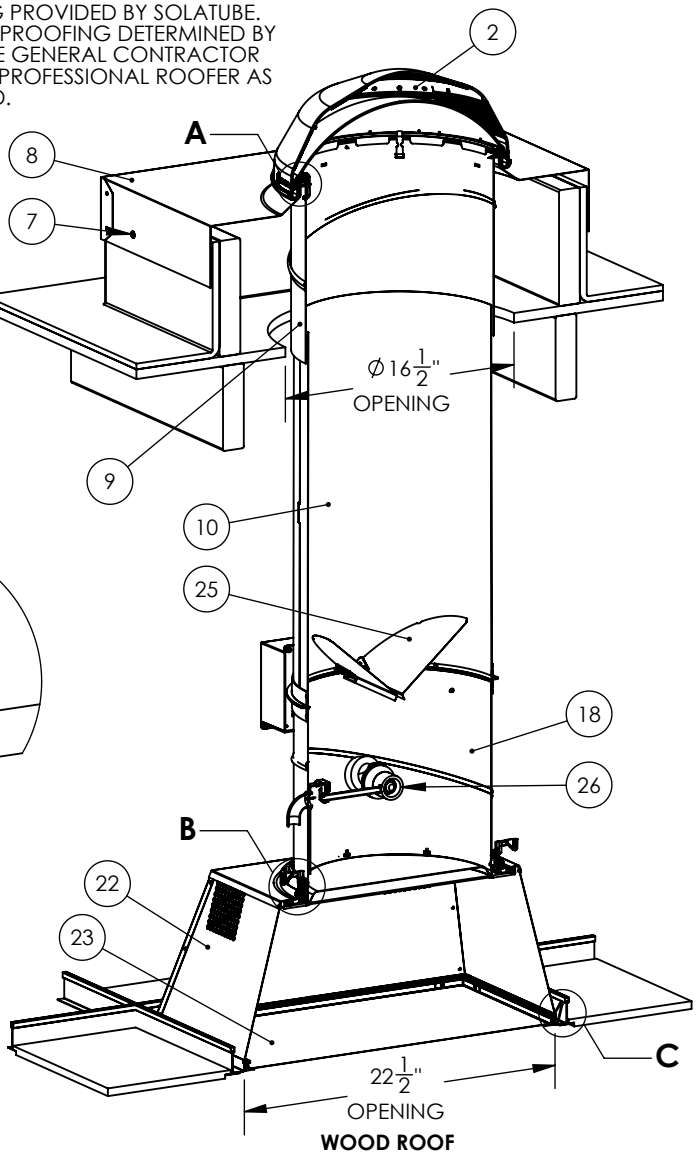

WOOD ROOF
TYPE IV OR V CONSTRUCTION

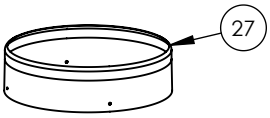

TURRET EXTENSION FOR FLASHING

NO-PITCH FLASHING

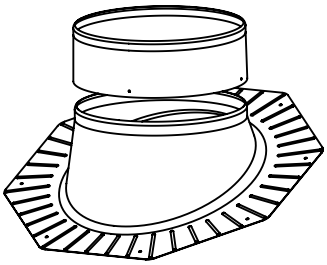

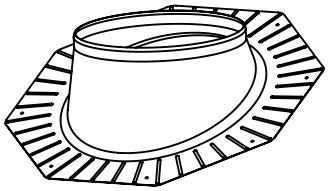

PITCH FLASHING

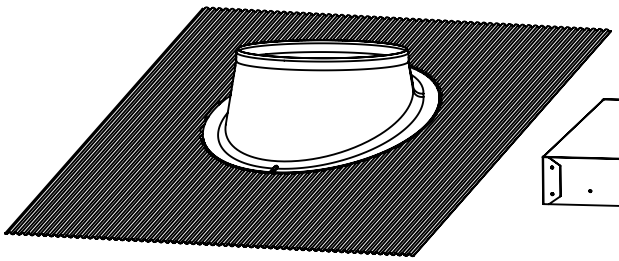

UNIVERSAL TILE FLASHING

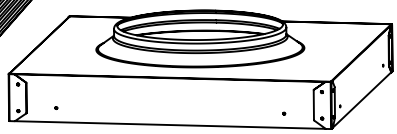

CURB FLASHING

ITEM NO.	QTY.	DESCRIPTION
1	1	OUTER DOME
2	1	LIGHT TRACKER
3	1	DOME RING
4	4	SCREW #8 X 1"
5	4	DOME RING SPACER
6	4	TOP TUBE CLIP
7*	8	SCREW #10 X 2" SMS
8	1	FLASHING
9	1	TOP TUBE
10	1	EXTENSION TUBE
11	4	SCREW #8 X 1.5" SMS
12	1	EFFECT LENS
13	1	EFFECT LENS SEAL
14	1	DOME RING SEAL
15	1	DIFFUSER PANEL
16	1	CEILING RING
17	1	DRESS RING
18	1	BOTTOM TUBE
19	4	CLAMP
20	1	CEILING RING RECT. SEAL
21	4	V-CLIP
22	1	METAL TRANSITION
23	1	METAL TRANS. DIFFUSER ASSY.

AL COMPONENTS		
ITEM NO.	QTY.	DESCRIPTION
24	1	INNER DOME
25	1	DAYLIGHT DIMMER
26	1	LIGHT FIXTURE
27	1	TURRET EXTENSION
28	1	DOME EDGE PROTECTION BAND

*USE (8) #10 TEK SCREWS FOR METAL ROOF

300 DS SOLATUBE WITH DETAILS

300 DS SKYLIGHT - MANUFACTURERS INSTALLATION DETAIL PACKAGE - PAGE 5 OF 5

REVISIONS					
REV.	ECO	DATE	REVISED	CHECKED	APPROVED
B	2673-1	9/21/2016	STEVENS		
C	2717-1	2/15/2017	STEVENS		
D	2779-1	3/16/2017	GIFFORD		

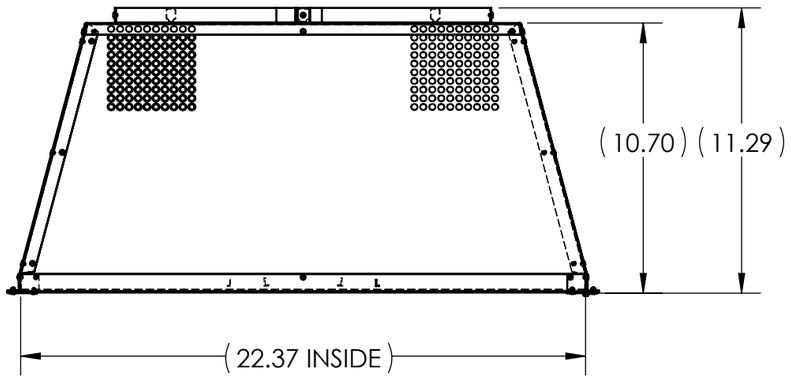

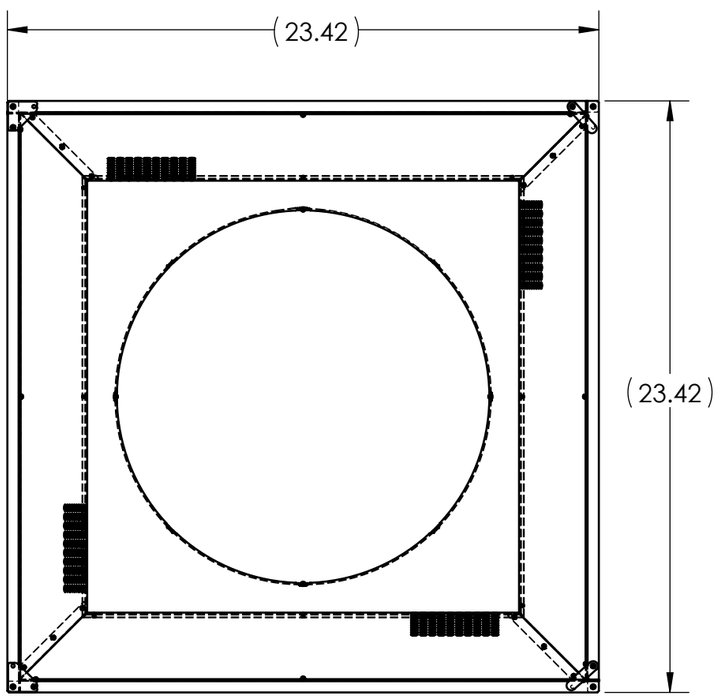

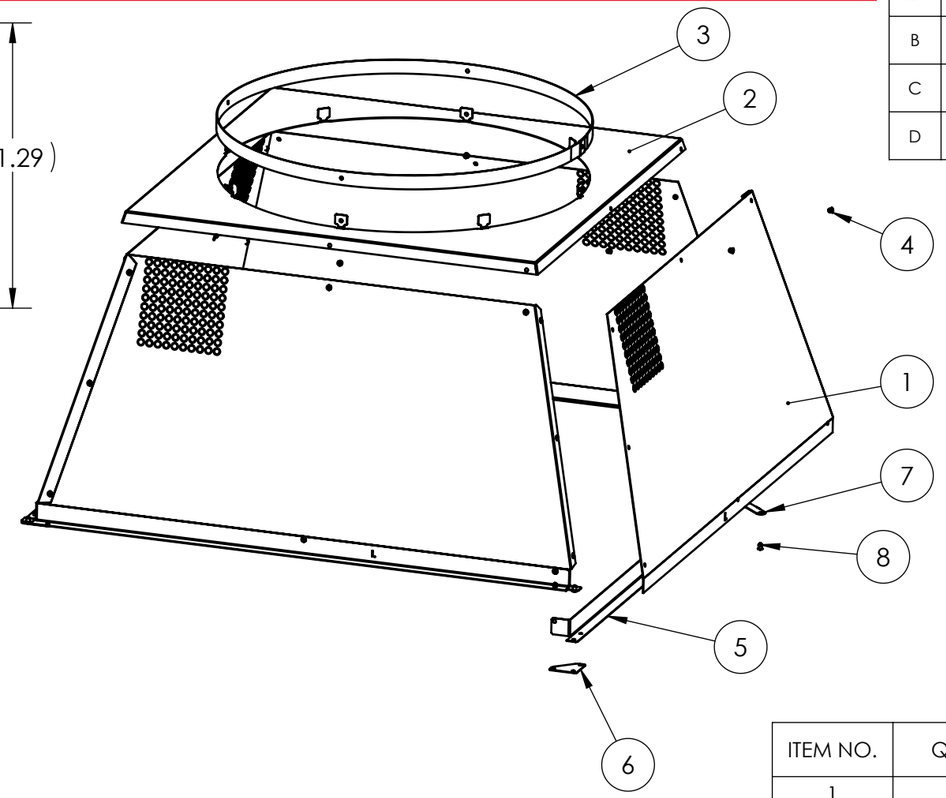

ITEM NO.	QTY.	PART NO.	DESCRIPTION
1	4	410775	TRANSITION PANEL DIMPLED 300 DS
2	1	402340	TRANSITION BOX CAP 300 DS
3	1	402350	TRANSITION CAP BELT 300 DS
4	32	700635	RIVET 1/8 X 1/4 BLIND, MULTI
5	4	402540	TRANSITION TRIM COMM METRIC
6	2	402145	TRANSITION TRIM CORNER BRACE METRIC
7	2	402210	TRANSITION TRIM LEVER METRIC
8	10	701180	RIVET 1/8 X 1/4 BLIND, MULTI WHITE
9	17.33 LF	620150	TAPE FOIL, ROLL 50M (NOT SHOWN)
10	1	501820	LABEL LITD ROLL (NOT SHOWN)

UNLESS OTHERWISE SPECIFIED:

TOLERANCES
ANGULAR: ±0.5°

INCH	MILLIMETER
.X ± .01	[.X] ± .3
.XX ± .005	[.XX] ± .12
.XXX ± .002	[.XXX] ± .050

MATERIAL
SEE BOM
--

FINISH
--
--

DO NOT SCALE DRAWING

PROPRIETARY AND CONFIDENTIAL

THE INFORMATION CONTAINED IN THIS DRAWING IS THE SOLE PROPERTY OF SOLATUBE. ANY REPRODUCTION IN PART OR AS A WHOLE WITHOUT THE WRITTEN PERMISSION OF SOLATUBE IS PROHIBITED.

DRAWN BY: STEVENS — DATE: 3/31/16
CHECKED BY: -- — DATE: --

INTERPRET DRAWINGS IAW:
ASME Y14.5 - 1994

SOLATUBE®
2210 OAK RIDGE WAY
VISTA, CALIFORNIA 92081-8341
PH (760) 597-4400

TITLE:

STS TRANSITION ASSY 290 DS METRIC

SIZE	PROJECTION	DWG. NO.	REV
B	(3rd)	402560	D
	UNIT MM[INCH]	SCALE: 1:6	SHEET 1 OF 1